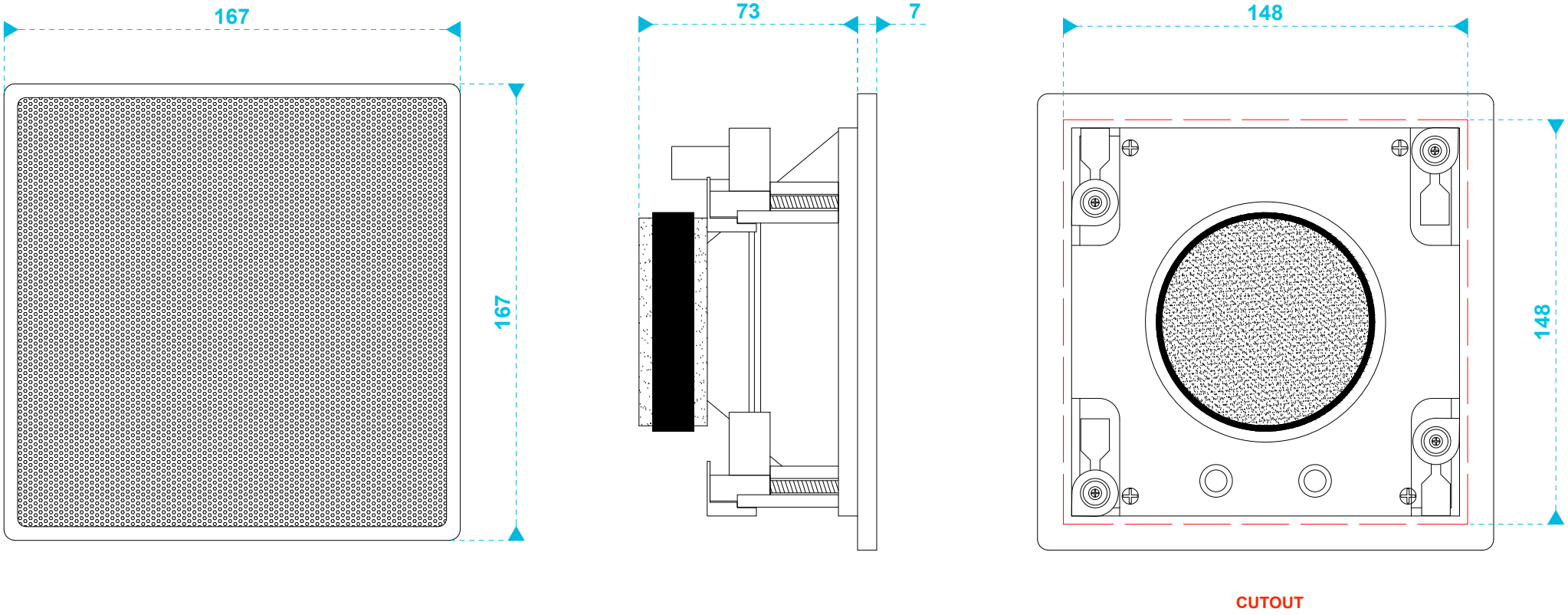


| | model name | product type | file modification date | unit of measurement |
|---|---|---|---|---|
| apart | CMSQ108 | built-in loudspeaker | 2017-05-24 | mm |